MAGNETIC THERMOCOUPLE

conatec
experts on control

DESCRIPTION:

The magnetic thermocouple performs the measurement on the surface, ensuring contact via a high-temperature magnet.

SENSOR FEATURES:

Type	Simple
Sensor	T, J, E, K, N according to IEC 60584-1
Tolerance	Class 1
Number of Threads	2
Temperature range	From 0ºC to 280ºC

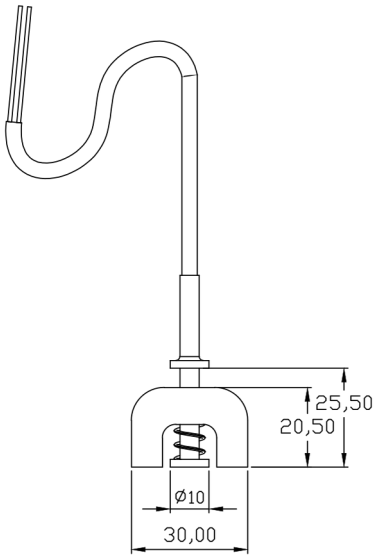

PROTECTIVE SHEATH:

Material	Stainless steel
Diameter	5mm
Length	25mm

CONNECTION TO PROCESS:

Type	High temperature magnet (Max. 300ºC)

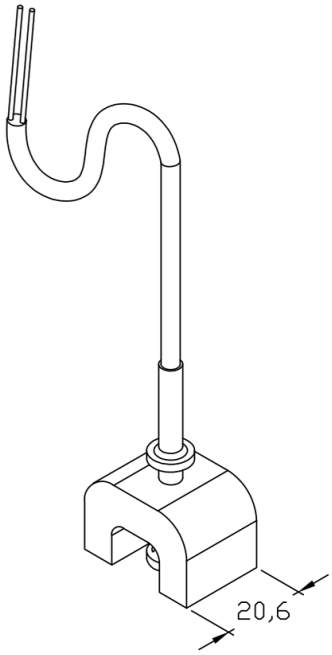

CABLE:

Number of drivers	2
Isolation	PVC, Silicone, Teflon, Metal mesh, Fiberglass

** Other constructions on request.*

C/ Gabiria,112 · 20305 IRUN (Gipuzkoa) · SPAIN · Tel.: +34 943 633 562 · Email: conatec@conatec.com